ISSN 2395-1621

Investigation of Heat Transfer Augmentation of Impinging Jet on Flat Plate Using Vortex Generators

#1Sonali S Nagawade, #2Prof. S Y Bhosale

1sonalinagawade1@gmail.com

2sybmodern@gmail.com

#12Mechanical Department, SaitribaiPhule Pune University
PES's Modern College of Engineering, Pune - 05

ABSTRACT

This experiment is to investigate heat transfer augmentation of air jet impingement on flat plate surface with vortex generators. The nozzle diameter of 10 mm is fixed. Reynolds number is varied from 15,000 to 25,000 based on nozzle exit conditions along with variation in jet to plate spacing from1, 2 and 4 times the nozzle diameters. The heat sink of 100 mm × 100 mm is taken for study with constant heat supply. The vortex generators used for the study include six equilateral triangles of side 5mm, trapezoids with height 3.33 mm. Numerical results show the triangular and trapezoid vortex generators provide better heat transfer as compared to flat plate. Experimental and numerical results obtained are obtained to check the trend of Nusselt number and follows same trend. The increase of Nusselt number depending on the shape of vortex generators, nozzle to plate spacing and Reynolds number is observed. At Z/D= 2, surface with triangular and trapezoid vortex generators gives 15-16 % enhancement in average Nusselt number over smooth surface. At Z/D= 4, surface with triangular and trapezoid vortex generators gives 6-7 % enhancement in average Nusselt number over smooth surface.The maximum local Nusselt number value of secondary peak is observed radial distance of r/D =1 for surface with triangular and trapezoid vortex generators at Z/D=1, 2 and 4. It is more pronounced at Z/D= 1 and Z/D= 2. Triangular vortex generators shows 55% enhancement at Z/D= 1 and 73% enhancement at Z/D= 2 and 36% enhancement at Z/D= 4 over smooth plate at secondary peak point for same Reynolds number.

Keywords— **Jet impingement; Nusselt number; Reynolds number; Vortex generators**

ARTICLE INFO

Article History

Received :18th November 2015

Received in revised form :

19th November 2015

Accepted : 21st November , 2015

Published online :

22nd November 2015

I. INTRODUCTION

Jet impingement is widely used where high convective heat transfer rates are required. The rapid development in microelectronics and the simultaneous drive to reduce the size and weight of electronic products have led to increased importance of the thermal management issues in industry. The problem arises due to restriction of space and also due to high dissipation rates, which have increased from a fraction to large number. As a result efficient cooling is a challenge in such cases.

Jet impingement is an attractive cooling mechanism due to the capability of achieving high heat transfer rates. Jet impingement systems provide an effective means for the enhancement of convective processes due to the high heat and mass transfer rates that can be achieved. The range of industrial applications that impinging jets are being used in today is wide. In the annealing and tempering of materials, impinging jet systems are finding use in the cooling of hot metal, plastic, or glass sheets as well as in the drying of paper and fabric. Often use multiple impinging jets in dense arrangements. Convective heat transfer to impinging jets is

known to yield high local and area averaged heat transfer coefficients. Impingement jets are of particular interest in the cooling of electronic components where advancement relies on the ability to dissipate extremely large heat fluxes.

For all the studies performed it has been shown that, for a constant jet diameter, heat transfer increases with increasing Reynolds number [2, 3]. It has been shown that, for a constant Reynolds number, decreasing the jet diameter yields higher stagnation and average heat transfer coefficient. This indicates that higher velocities are created by the smaller nozzles.

The thermal and hydraulic characteristics of various impinging heat sinks have extensively studied by many researchers. Luis A. Brignoni and Suresh V. Garimella evaluated experimental optimization of confined air jet impingement on a pin fin heat sink [3]. Four single nozzles of different diameters and two multiple-nozzle arrays were studied at a fixed nozzle-to-target spacing, for different turbulent Reynolds numbers (5000≤ Re≤ 20 000). The bare surface experiments showed that for a given Reynolds number, higher heat transfer coefficients were obtained with the smaller diameter nozzles which may be attributed to the associated higher jet velocities. In contrast, the larger single nozzles performed better when the heat sink was present at a given Reynolds number.

Hung-Yi Li et al. [3] studied the thermal performance of heat sinks with confined impingement cooling is measured by infrared thermography. They found that increasing the Reynolds number of the impinging jet reduces the thermal resistance of the heat sinks consistently. Increasing the fin height to enlarge the area of heat transfer also decreases the thermal resistance, but the effects are less conspicuous than those on altering the fin width. Generally speaking, the thermal performance of the pin–fin heat sinks is superior to that of the plate–fin heat sinks because the pin–fin heat sinks consist of smaller volumes but greater exposure surfaces. Hung-Yi Li, Kuan-Ying Chen utilized the infrared thermography technique to investigate the thermal performance of plate-fin heat sinks under confined impinging jet conditions [4]. They concluded that the thermal resistance of the heat sink apparently decreases as the Reynolds number increases; however, the decreasing rate of the thermal resistance declines with the increase of the Reynolds number. An increase of the fin width reduces the thermal resistance initially. Increasing the fin height can increase the heat transfer area which lowers the thermal resistance. Moreover, the influence of the fin height on the thermal resistance seems less obvious than that of the fin width.

Yue-Tzu Yang, Huan-SenPeng carried the numerical simulation of the heat sink with an impingement cooling at various Reynolds numbers and fin dimensions are proposed [5]. They found the promising result that an adequate un-uniform fin width design could increase the Nusselt number and the COE of the heat sink simultaneously. Besides, the increment of the Nusselt number decreases gradually as the Reynolds number increases. Moreover, the effects of fin dimensions on the Nusselt number at high Reynolds numbers are more obvious than that at low Reynolds numbers. In addition, the results also show that there is potential for optimizing the un-uniform fin width design.

Yue-Tzu Yang, Huan-SenPeng carried the numerical simulation of pin-fin heat sinks with confined impingement cooling at various Reynolds numbers and un-uniform fin height designs are proposed [6]. The purpose of the experiment was to evaluate the possibility of improving the heat sink performance by minimizing the junction temperature of the heat sink without sacrificing the whole thermal performance. It is found that an adequate un-uniform fin height design could decrease the junction temperature and increase the enhancement of the thermal performance simultaneously. The results also show that there is a potential for optimizing the un-uniform fin height design.

Colin Glynn et. al. studied jet impingent cooling, it has been shown that when Z/D increased from 1 to 4, Jet diameter varied from 0.5mm to 1.5 mm and found that Area average heat transfer increases with decrease in jet diameter because of increase in velocity. H. A. El-Sheikh and S. V. Garimella investigate Heat transfer from pin-fin heat sinks under multiple impinging jets [8]. Four pin-finned heat sink assemblies with different pin heights and footprint areas were studied and compared to base line, unpinned heat sinks at two jet-to-jet spacing as a function of Reynolds number. The results for the multiple jets were compared to single jets, both at a fixed orifice diameter (d=12.7 mm) and for the same total orifice area (single jet with d= 25.4 mm). At a fixed Reynolds number, the heat transfer coefficient decreased by 10% as the jet-to-jet spacing was decreased from of 3 to 2 for the large, unpinned heat sink. However, an increase was observed for the pinned heat sinks when S/d was decreased from 3 to 2 largely due to the unique design of the heat sink in this study. Single jets yielded lower heat transfer coefficients than multiple jets of the same nozzle diameter for all heat sinks tested at a fixed Reynolds number. In contrast, the heat transfer coefficients with single jets were higher when compared on the basis of total air flow rate.

Sidy Ndao et al. Jensen showed that single-phase experimental Nusselt numbers for jet impingement on a smooth surface using water and R134a as working fluids were found to increase with increasing Reynolds number [9]. Significant enhancement of the single-phase heat transfer coefficients has been observed as a result of the presence of the micro pin fins on the impingement surface. Enhancement factors as high as 3.03 or about 200% increase in the heat transfer coefficients were observed when the area enhancement was 2.44. Enhancements in the heat transfer coefficients were attributed to area enhancement and flow mixing, interruption of the boundary layers and augmentation of turbulent transport.

Sidy Ndao et al. [10] investigated the effects of cross flow area and pin fin shapes on the single-phase impingement point heat transfer coefficients of jet impingement on micro pin fins have been performed. The micro pin fins were circular, hydrofoil, square, and elliptical pin fins. Circular pin fin and square pin fin showed highest heat transfer coefficient for given jet velocity.

P.M. Nakod, et al. [11] experimentally investigated the effect of the finned surfaces and surfaces with vortex generators on the local heat transfer coefficient between impinging circular air jet and flat plate. Reynolds number is varied between 7000 and 30,000 based on the nozzle exit condition and jet to plate spacing between 0.5 and 6 nozzle diameters. The augmentations in the heat transfer for the surfaces vortex generators are higher than that of the finned surfaces. The heat transfer augmentation in case of vortex generator is as high as 110% for a single row of six vortex

generators at a radius of 1 nozzle diameter as compared to the smooth surface at a given nozzle plate spacing of 1 nozzle diameter and a Reynolds number of 25,000 at extreme radial location.

It is found that Shear-Stress Transport (SST) k-w turbulence model can give the better predictions of fluid flow and heat transfer properties for solving such types of problems. Chougule N.K., et al [12] SST k-w model, the effects of jet Reynolds number (Re), target spacing-to-jet diameter ratio (Z/D) on average Nusselt number (Nu_{avg}) of the target plate are examined. These numerical results are compared with the available benchmark experimental data. It is found that Nua increases from 40 to 50.1 by increasing Reynolds number from 7000 to 11000 at Z/D= 6. By increasing Z/D ratio from 6 to 10, Nu_{avg} decreases from 50.1 to 36.41 at Re11000.

II. DESCRIPTION OF PHYSICAL PROBLEM

A. Description of Physical Model

The schematic of single jet impingement on heat sink which is to be analysed is shown in fig.1. A plat plate heat sink of 100×100 × 6 is taken for study which is subjected to constant heat flux of 50 W from bottom. All surfaces except bottom plate are outlets

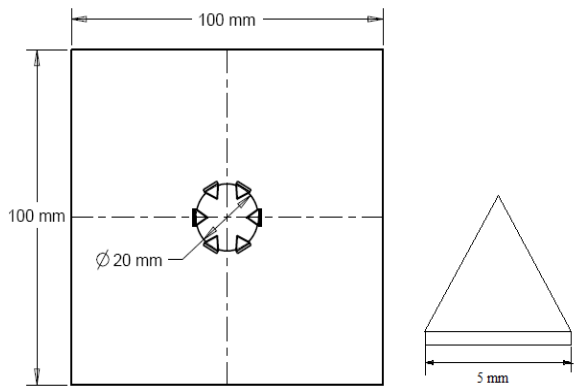

(a) Arrangement of triangular six vortex generators

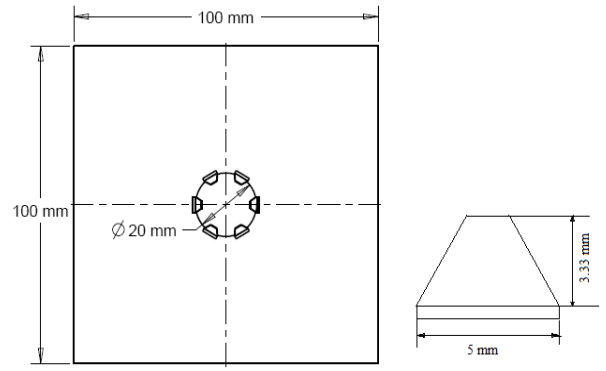

(b) Arrangement of trapezoids six vortex generators

Fig. 1: Details of vortex generators

The material of Vortex generators are in the form of equilateral triangle of 5mm side and trapezoids of height 3.33 mm with base 5 mm are arranged in a circular pattern at a radius of 1 times the nozzle diameter on two different smooth plate. The material of heat sink is aluminium. Nozzle diameter is 10 mm. The air jet is discharged though the round nozzle having diameter *D* and length *l*. Reynolds number is varied between 15000 to 25000 in turbulent range to study the effect of *Re* on Nusselt number.

B. Objectives of Project work

The present work investigated heat transfer and fluid flow characteristics within an impingement model of single jet on smooth surface and surface with triangular and trapezoid vortex generators at different Reynolds numbers and Z/D ratio.

III. EXPERIMENTAL DETAILS

Fig 2. It is an Air flow bench, which provides controlled and measurable flow of air through nozzles or jet plate directed towards the target plate. It consists of a blower, air straightener (air box), contraction section, and structure and Data Acquisition System (DAQ) to measure temperature, pressure.

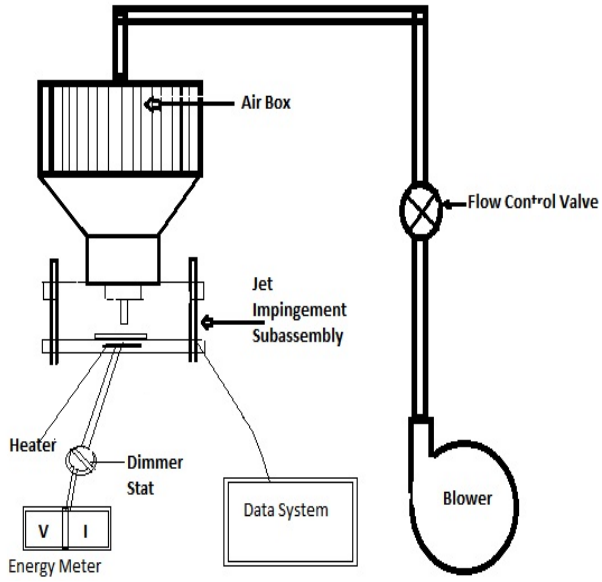

Fig.2: Experimental set up

The blower draws air from the atmosphere and delivers it along a pipe to an air box, which is above the test area. There is honeycomb structure inside the air box in order to provide streamlined flow prior to impinging on the heat sink and a butterfly valve used in order to regulate the discharge from the centrifugal blower. The air flow bench structure is made to incorporate other devices such as DAQ system, Power supply, pressure measurement devices and various controls. Micro-manometer is used to measure the static pressure of air at the outlet of the jet at different locations. Thermocouples are used to measure the temperature. Average of all the readings is taken and jet velocity is calculated. To measure the temperature at the base of the fin, type thermocouples are mounted on base through 1 mm diameter hole.

IV.MATHEMATICAL MODELLING

A. Geometry and Meshing

The geometry is created in Creo 3.0 and meshing is done in ICEM CFD. As the geometry is small, we consider complete geometry for the analysis. The solution domain is

filled with stagnant air. The computation domain is fluid domain (air).

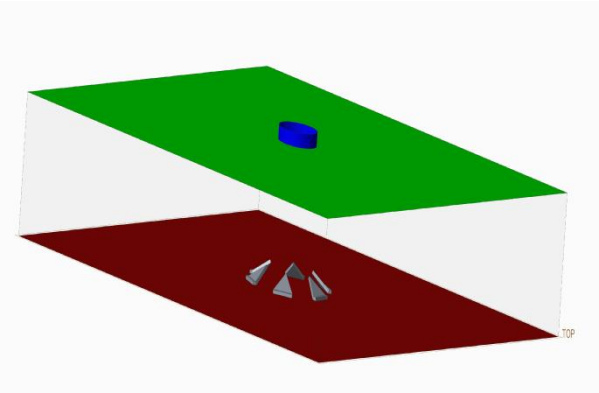

(a)Flat plate with 6 triangular vortex generators at 30 degree

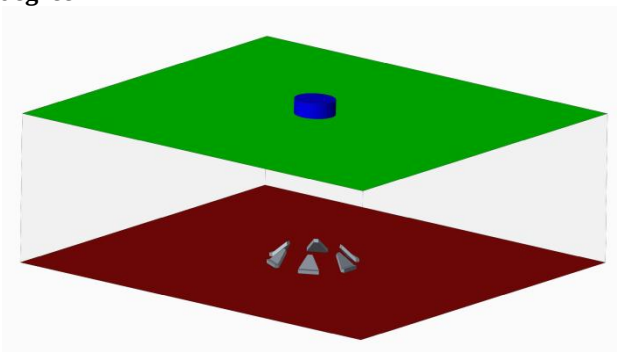

(b) Flat plate with 6 trapezoid vortex generators at 30 degree

Fig. 3: Computational and physical domain of jet impingement

It is assumed that heat is generated inside the heat sink at uniform rate and can be represented by constant heat flux from bottom surface of hear sink. To reduce the temperature of heat sink at stagnation point vortex generators are provided. Air flow at high velocity passes through a round jet with length = 40 mm and diameter = 10 mm. The details of computational and physical domain is shown fig.3

B.Numerical Solution

The fluid flow and heat transfer is governed by three fundamental equations continuity equation, conservation of momentum and conservation of energy equation In this case, the numerical solution were carried out using commercial CFD solver Fluent version 14.5.

SST (Shear Stress transport) Turbulence model is used because some authors have already found in previous study that SST K-ω model is in better agreements with the internal heat transfer coefficient measured inside a cooling device similar to that of present study. In the fluid domain the inlet boundary condition is specified the measured velocity and static temperature (300K) of the flow were specified at the inlet of the nozzle. No-slip condition was applied to the wall surface. In fluid domain there is also opening boundary condition in which flow regime is subsonic, relative pressure is 0 Pa with operating temperature (300K) and the turbulence intensity of 5%.

The variation of thermal and physical properties of air with temperature is neglected. The flow field was numerically examined by use of Fluent (ANSYS v14.5), assuming the steady-state flow.

C. Solver

A geometry and mesh object is imported into Fluent CFD software environment for solving governing equations. The flow and turbulence fields have to be accurately solved to obtain reasonable heat transfer predictions. Second order scheme is used for all terms that affect heat transfer. Standard scheme is used for the pressure; second order upwind discretization scheme is used for momentum, turbulence kinetic energy, specific dissipation rate, and the energy. Flow, turbulence, and energy equations have been solved. To simplify the solution, the variation of thermal and physical properties of air with temperature is neglected. The standard SIMPLE algorithm is adopted for the pressure velocity coupling. The simulation type is steady state condition, convergence criteria are specified as 10E-06 residuals.

V.RESULT & DISCUSSION

The heat transfer data collected for two different configurations for the Reynolds number is varied between 15000, 20000, 25000 based on nozzle exit condition and jet to plate spacing of 1, 2 and 4 nozzle diameter, for which, results are presented in following sections.

Validation with Experimental Results

Comparison between experimental and CFD results are shown in Table 1. To validate CFD results, the detailed experimentation were carried out on flat plate without vortex generators, Flat plate with triangular vortex generators, and flat plate with trapezoid vortex generators. The average temperature obtained from the experimental data is used to validate the computational work. To simulate the above experimental conditions in context of CFD analysis, the same geometry, boundary conditions are applied and also temperature monitoring points are located at the same position where thermocouples are physically located. Mostly within all the range of parameters, it is observed that CFD results are in good agreement with experimental results. Average Nusselt number increases by 15-17 % in flat plate with vortex generators over flat plate without vortex generators at at Z/D= 2 and Z/D= 4 when Re = 25000.

TABLE 1

COMPARISON OF EXPERIMENTAL AND CFD RESULTS

Configuration of plate	***Z/D***	***Experimental Results*** Nu_{avg}	***Numerical Results*** Nu_{avg}	***% Error***
Flat Plate without vortex generators	1	109.072	95.3	12.62
	2	95.176	81.41	14.46
	4	100.892	87.162	13.61
Flat Plate with	1	108.978	92.966	14.69

Triangular vortex generators	2	110.4898	95.216	13.82
	4	109.164	92.336	15.42
Flat Plate with Trapezoid vortex generators	1	111.804	93.034	16.79
	2	106.432	94.506	11.21
	4	110.532	94.37	14.62

Temperature and surface heat transfer coefficient contours of vortex generators on flat plate surface.

The temperature contours of smooth plate without vortex generators, surface with triangular and trapezoid vortex generator for Re= 25000 at Z/D= 1,2 and 4 is shown below (Fig.4) as higher Nusselt number is observed at this Reynolds number. From the temperature distribution it is clear that at smaller Z/D ratio (Z/D= 1) the temperature on target surface is lower and uniform. The temperature variation in vortex area is in the range of 301K to 317 K.

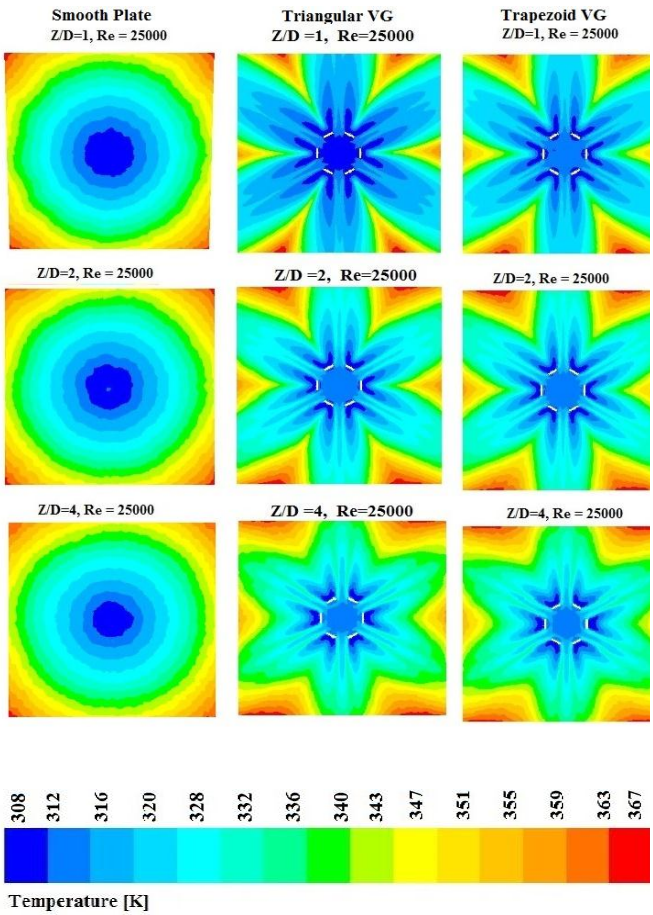

Fig.4 Temperature contours (Re= 25000)

These temperature contour plots show that for higher Reynolds number, average temperature of heat sink is lower due to localized cooling. It is also observed that the portions of plate below nozzle area are cooled intensively than other area. Fig.4 shows the distribution of average temperature on flat plate with triangular and trapezoid vortex generators at different Z/D. It is also observed that the portions of flat plate below nozzle area are cooled intensively than other area. Minimum temperature is obtained at stagnation point.

Effect ofZ/D on Local Nusselt Number

Fig 6 shows CFD local Nu for Re= 25000 at Z/D= 1, 2 and 4 for both triangle vortex generators on flat plate.

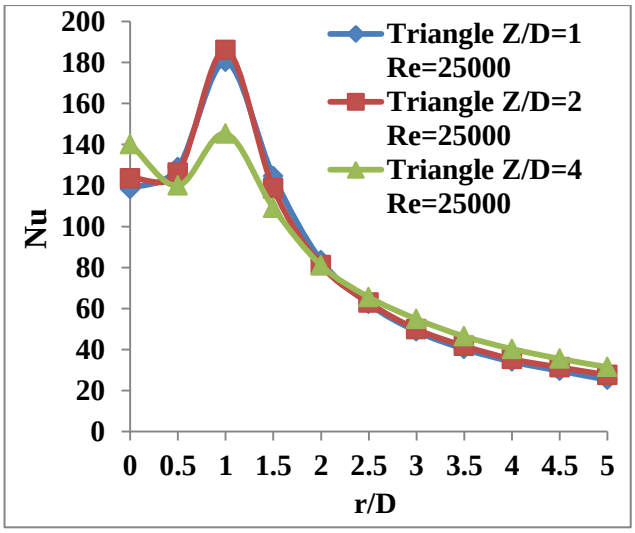

Fig. 6Comparison of the Nusselt number for smooth surface with triangular vortex generators at Reynolds number of 25000 for different Z/D's

Fig6 shows the effect of Z/D ratio on local Nusselt number at Reynolds number of 25000 on smooth plate with triangular vortex generators. With decreasing Z/D ratios the Nusselt number increases accordingly at secondary peak point at radial distance r/D = 1 but Local Nusselt number at stagnation point increases at Z/D= 4. The Z/D= 1 shows 26 % enhancement over Z/D= 4 at secondary peak point for same Reynolds number. The Z/D= 4 shows 17-18 % enhancement over Z/D= 2 and Z/D= 1 at stagnation point for same Reynolds number. It is observed that at smaller Z/D ratios the jet strikesdirectly on target surface without losing its much momentum with surrounding flow, this result in the jet reaching the target surface with higher momentum, this increases the heat transfer coefficient.

Fig 7 shows the effect of Z/D ratio on local Nusselt number at Reynolds number of 25000 on smooth plate with trapezoid vortex generators. With decreasing Z/D ratios the Nusselt number increases accordingly at secondary peak point at radial distance r/D = 1 but Local Nusselt number at stagnation point increases at Z/D= 4.The Z/D= 1 shows 8 % enhancement over Z/D= 4 at secondary peak point for same Reynolds number. The Z/D= 4 shows 6 % enhancement over Z/D= 1 and Z/D= 2 at stagnation point for same Reynolds number.

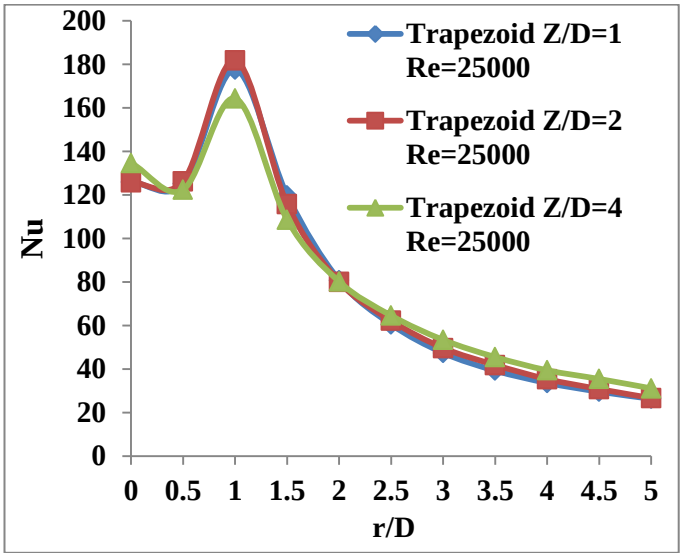

Fig.7. Comparison of the Nusselt number for smooth surface with trapezoid vortex generators at Reynolds number of 25000 for different Z/D's.

Effect of Different Configurations on Nusselt Number Distribution

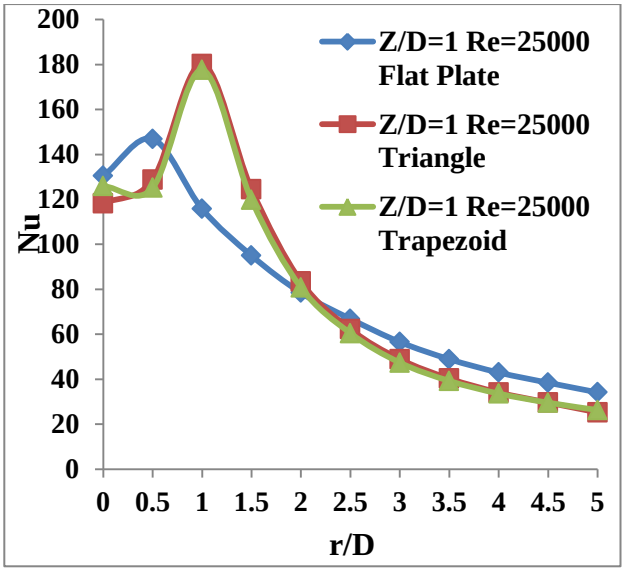

Fig. 8 Comparison of the Nusselt number for smooth surface without vortex generators and with vortex generators at Reynolds number of 25000 Z/D= 1.

Fig 8 shows the effect of different configurations on local Nusselt number at Z/D= 1 and Reynolds number of 25000 on smooth plate without vortex generators, smooth plate with triangular and trapezoid vortex generators. In this case secondary peak point of Nusselt number for smooth plate without vortex generators is observed at radial distance r/D = 0.5 whereas secondary peak point for smooth plate with triangular and trapezoid vortex generators is observed at r/D=1.The Triangular vortex generators shows 55% enhancement over smooth plate at secondary peak point for same Reynolds number.

Effect of Reynolds Number on Local Nusselt Number

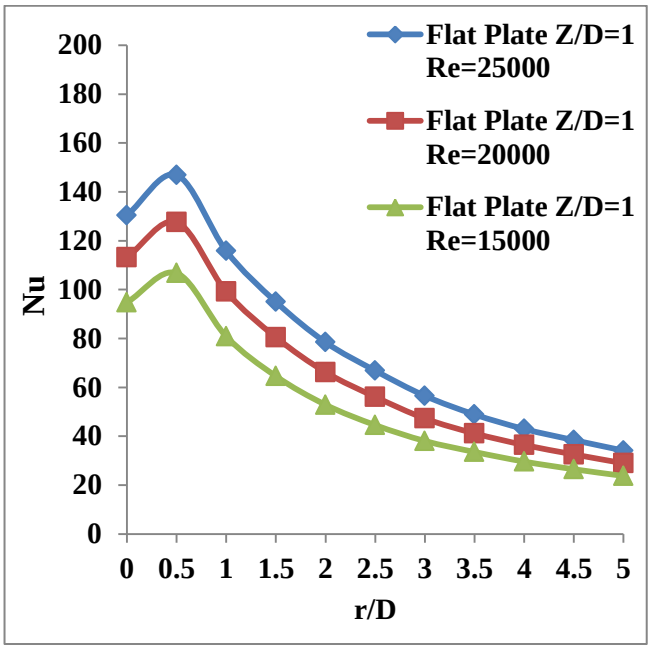

Fig.9 Comparison of the Nusselt number with radial distance for smooth surface without vortex generators at a Z/D= 1 for different Reynolds number.

Fig.9 shows average Nusselt number variation with respect to Reynolds number on flat plate. It is observed that the Nusselt number is directly proportional to Reynolds number. At higher Reynolds number, its effect on Nusselt number is more pronounced.Secondary peak value of Nusselt number is observed at radial distance of r/D = 0.5 for Z/D= 1 and 2 only.

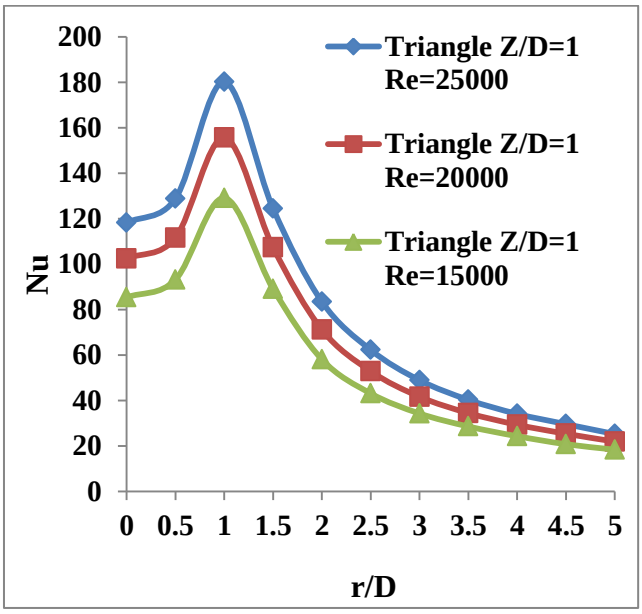

Fig.10 Comparison of the Nusselt number with radial distance for smooth surface with triangular vortex generators at a Z/D= 1 for different Reynolds number.

Fig.10 and Fig.11 shows average Nusselt number variation with respect to Reynolds number on flat plate with triangular and trapezoid vortex generators. It is observed that the Nusselt number is directly proportional to Reynolds number. At higher Reynolds number, its effect on Nusselt number is more pronounced. Secondary peak value of Nusselt number is observed at radial distance of r/d =1 for Z/D= 1 and 2 is more compared with Z/D= 4.

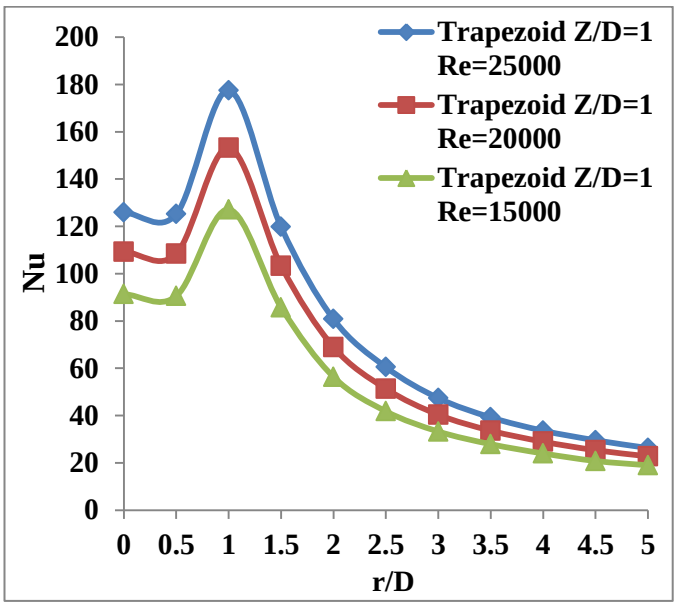

Fig.11 Comparison of the Nusselt number with radial distance for smooth surface with trapezoid vortex generators at a Z/D= 1 for different Reynolds number

VI.CONCLUSION

The present work investigated heat transfer and fluid flow characteristics within an impingement model of single jet on smooth surface and surface with triangular and trapezoid vortex generators at different Reynolds numbers and Z/D ratio. Reynolds number is 15000,20000 and 25000 based on the nozzle exit condition and jet to plate spacing between 1,2 and 4 nozzle diameters. Vortex generators in the form of equilateral triangles of side 5 mm are used trapezoids with height 3.33 mm. Effect of Reynolds number, nozzle to the target plate spacing and shape of vortex generators on Nusselt number is studied.

1) Z/D ratio had a significant impact on heat transfer. At smaller Z/D ratios with higher Re, there is vortex flow near the target surface in wall jet region, causing increase in Nusselt number. At Z/D= 2, surface with triangular and trapezoid vortex generators gives 15-16 % enhancement in average Nusselt number over smooth surface. At Z/D= 4, surface with triangular and trapezoid vortex generators gives 6-7 % enhancement in average Nusselt number over smooth surface. This increase in the heat transfer for the surface with vortex generator is speculated because of the disturbing of the jet before impingement when plate is kept within the potential core, which may have increased the turbulence intensity at the impingement.
2) The maximum local Nusselt number value of secondary peak is observed radial distance of r/D =1 for surface with triangular and trapezoid vortex generators at Z/D= 1, 2 and 4. It is more pronounced at Z/D= 1 and Z/D= 2. Triangular vortex generators shows 55% enhancement atZ/D= 1 and 73% enhancement at Z/D= 2 and 36% enhancement at Z/D= 4 over smooth plate at secondary peak point for same Reynolds number.
3) At Z/D= 2 and Re=25000 comparatively favorable results are observed for surface with vortex generators.
4) The maximum local Nusselt number value of secondary peak is observed radial distance of r/D = 0.5 for smooth surface without vortex generators at Z/D= 1 and 2 only.
5) Position of vortex generators at r/D has significant impact on Nusselt number because secondary peak point shifted from r/D=0.5 to r/D = 1.
6) For a given Z/D ratio, the same temperature contours are observed only temperature range is varying. At smaller Z/D ratio more uniform target surface temperate is obtained.
7) More turbulence is observed at higher Re which helps to enhance heat transfer. At higher Re the Nu_{avg} increases but on other side flow become wavy and diverts from the target impingement.
8) Ultimately, CFD results are validated by experimentations to determine overall error in predicting real situation, CFD results shows good agreement with experimental results (82 – 86% agreement).

VII. SCOPE FOR FUTURE WORK

The present work can be further extended for different geometries of the vortex generators being used on the smooth plates.Inclination angle between plane of plate and plane of vortex generators can be varied changed to check the effect of vortex generators.

REFERENCES

[1] N. Zuckerman, N. Lior, “Impingement heat transfer: correlations and numerical modeling”, J. Heat Transfer 127 (2005) 544–552.
[2] L.A. Brignoni, S.V. Garimella, “Experimental optimization of confined air jet impingement on a pin fin heat sink”, IEEE Transactions on Components and Packaging Technologies 22 (3) (1999) 399 - 404.
[3] H.Y. Li, S.M. Chao, G.L. Tsai, “Thermal performance measurement of heat sinks with confined impinging jet by infrared thermography”, International Journal of Heat and Mass Transfer 48 (2005) 5386 - 5394.
[4] H.Y. Li, K.Y. Chen, “Thermal performance of plate-fin heat sinks under confined impinging jet conditions”, International Journal of Heat and Mass Transfer 50 (2007) 1963 - 1970.
[5] Y.T. Yang, H.S. Peng, “Numerical study of pin-fin heat sink with un-uniform fin height designs”, International Journal of Heat and Mass Transfer 51 (2008) 4788 - 4796.
[6] Y.T. Yang, H.S. Peng, “Numerical study of the heat sink with un-uniform fin width designs”, International Journal of Heat and Mass Transfer 52 (2009) 3473 - 3480.
[7] Colin Glynn, Tadhg O’Donovan and Darina B. Murray, “Jet Impingement Cooling”, from CTVR (Centre for Telecommunications Value-Chain-Driven Research), Department of Mechanical and Manufacturing Engineering, Trinity College, Dubli
[8] H. A. El-Sheikh and S. V. Garimella, “Heat transfer from pin-fin heat sinks under multiple impinging jets”, IEEE transactions on advanced packaging, vol. 23, no. 1, February 2000

[9] Sidy Ndao, HeeJoon Lee 1, Yoav Peles, Michael K. Jensen, "Heat transfer enhancement from micro pin fins subjected to an impinging jet" International Journal of Heat and Mass Transfer 55 (2012) 413–421.

[10] Sidy Ndao a,Yoav Peles b,1, Michael K. Jensen b,2 "Effects of pin fin shape and configuration on the single-phase heat transfer characteristics of jet impingement on micro pin fins", International Journal of Heat and Mass Transfer 70 (2014) 856–863.

[11] P.M.Nakod,S.V.Prabhu,R.P.Vedula, Heat transfer augmentation between impinging circular air jet and flat plate using finned surfaces and vortex generators, Experimental thermal and Fluid science 32(2008) 1168-1187.

[12] N.K. Chougule, G.V.Parishwad, P.R.Gore, S Pagnis, "CFDAnalysis of Multi-jet Air Impingement on Flat Plate," The World Congress on Engineering 2011. N. Zuckerman, N. Lior, "Impingement heat transfer: correlations and numerical modelling", J. Heat Transfer 127 (2005) 544–552.